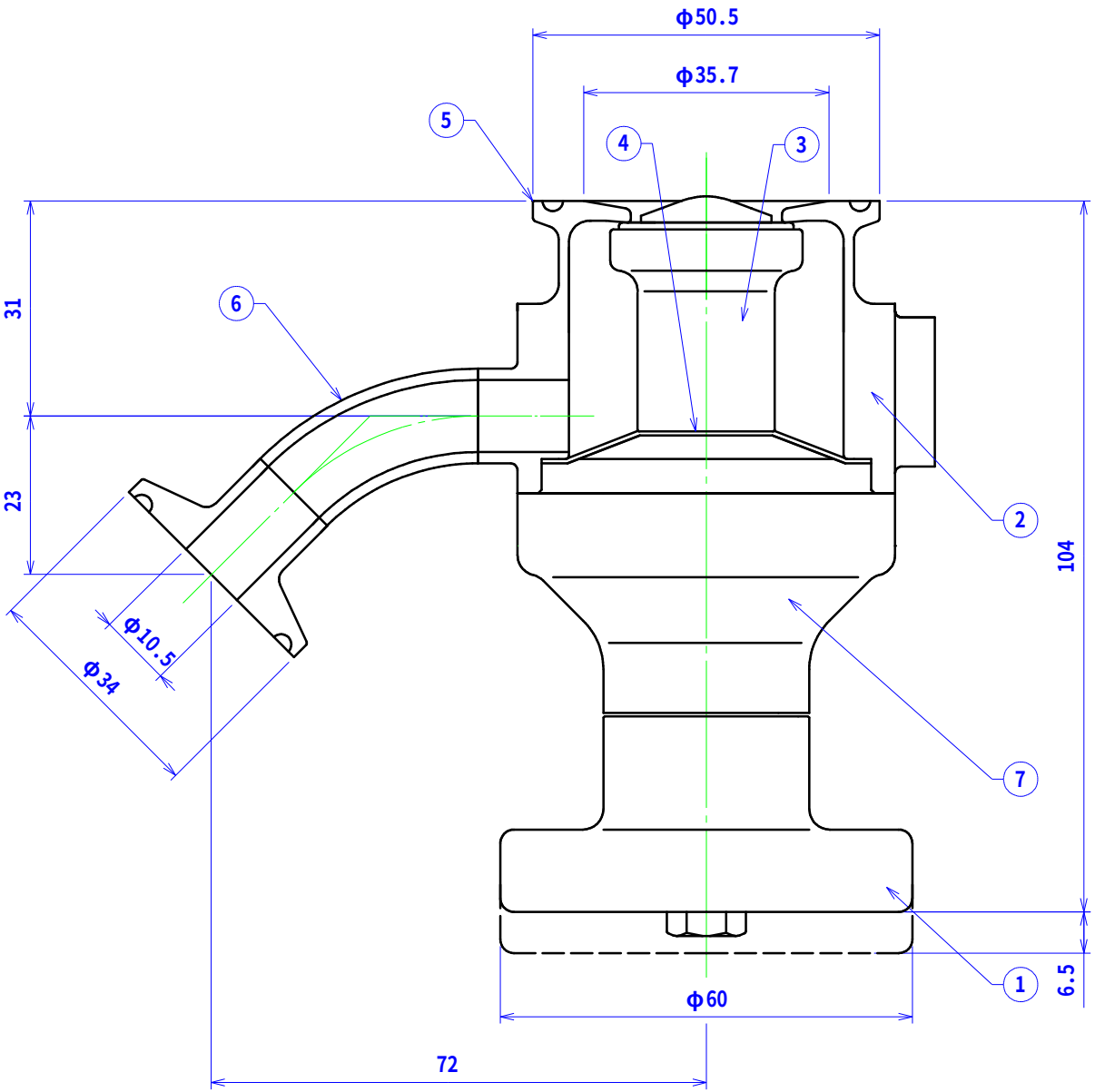

No	Part's Name	Material	Qt'y	Rev.Reason
1	M-Handl	SUS304	1	
2	Body	SUS316L	1	Electro-Polishing
3	D-Main Shaft Ass'y	SUS316L+PTFE	1	Electro-Polishing
4	Diaphragm	PTFE/FKM	1	
5	I.S.O 1.5S Ferrule	SUS316L	1	Electro-Polishing
6	8A 45 ° Sweep Elbow	SUS316L	1	Electro-Polishing
7	M-Body	SUS304	1	

指示無き R面

R =

指示無き C面

C =

普通寸法許容公差 + -

区分	精級	中級	粗級
～6	0.05	0.08	0.2
～18	0.08	0.10	0.3
～50	0.10	0.15	0.4
～180	0.20	0.30	0.8
～500	0.30	0.50	1.2
～1000	0.60	1.00	2.5

REV.	DATE	REV.REASON	CHECK
△×			

I.O.Technologies

MODEL: SD-B-8 M-1-*-*-1.5FE

MATERIAL:

DATE: 2004/10/12

TITLE: Diaphragm Valve (Tank)

APPROVED: K.OHTA

CHECKED:

DESIGNED: S.OHTSUKA

DRAWING No.: TS0045 △

1/1