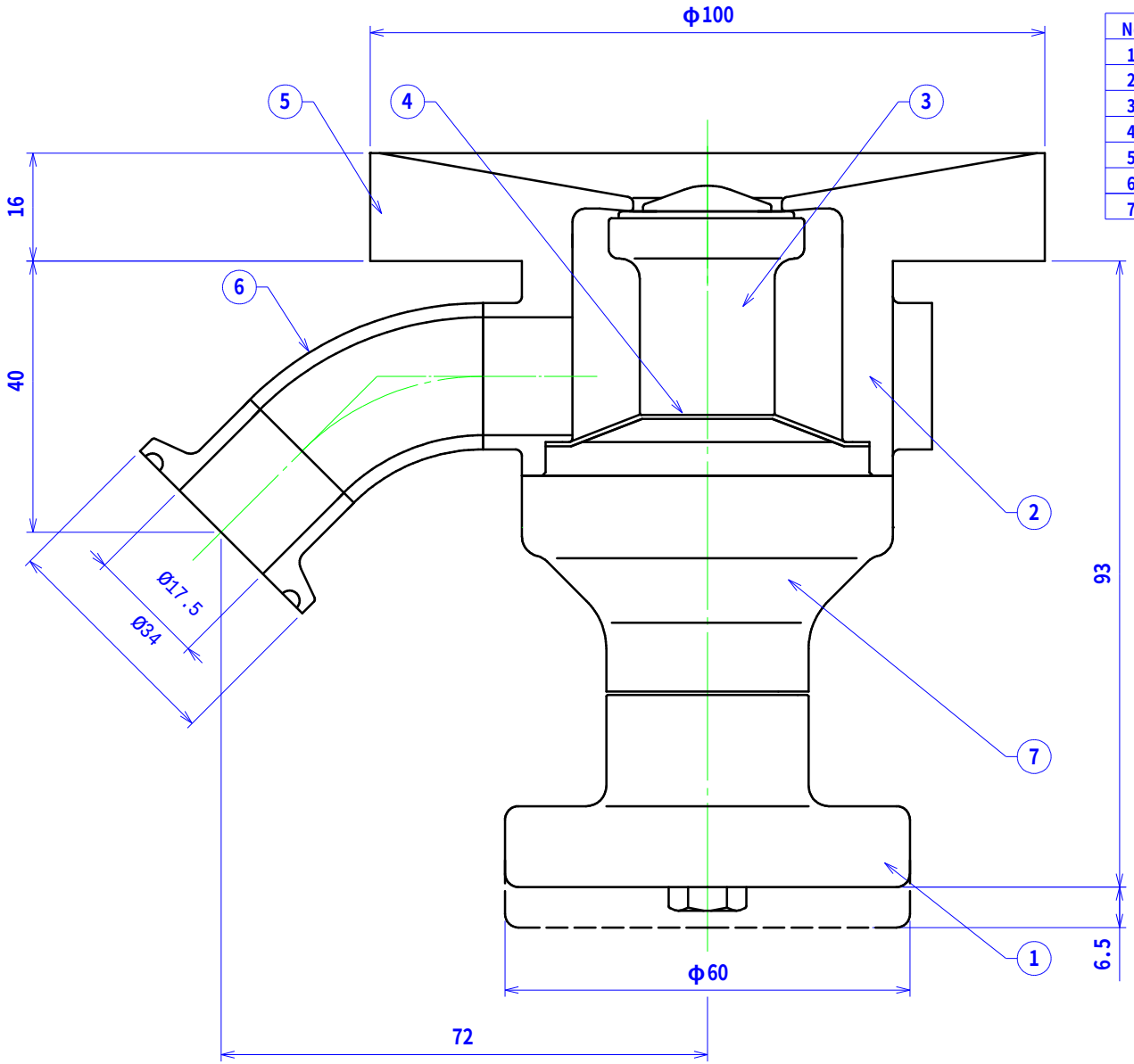

No	Part's Name	Material	Qt'y	Rev.Reason
1	M-Handl	SUS304	1	
2	Body	SUS316L	1	Electro-Polishing
3	D-Main Shaft Ass'y	SUS316L+PTFE	1	Electro-Polishing
4	Diaphragm	PTFE/FKM	1	
5	φ100×16t Flange	SUS316L	1	Electro-Polishing
6	15A 45° Sweep Elbow	SUS316L	1	Electro-Polishing
7	M-Body	SUS304	1	

指示無き R面	普通寸法許容公差 + -	区分	精級	中級	粗級
R =		～6	0.05	0.08	0.2
指示無き C面		～18	0.08	0.10	0.3
		～50	0.10	0.15	0.4
		～180	0.20	0.30	0.8
		～500	0.30	0.50	1.2
		～1000	0.60	1.00	2.5
C =		◎		▱	
		//		⊥	

REV.	DATE	REV.REASON	CHECK
△×			

I.O.Technologies

MODEL	SD-B-15 M-1-2-0-0
MATERIAL	
DATE	2004/10/14
TITLE	Diaphragm Valve (Tank)
APPROVED	K.OHTA
CHECKED	
DESIGNED	S.OHTSUKA
DRAWING No.	TS0012 △
	1/1