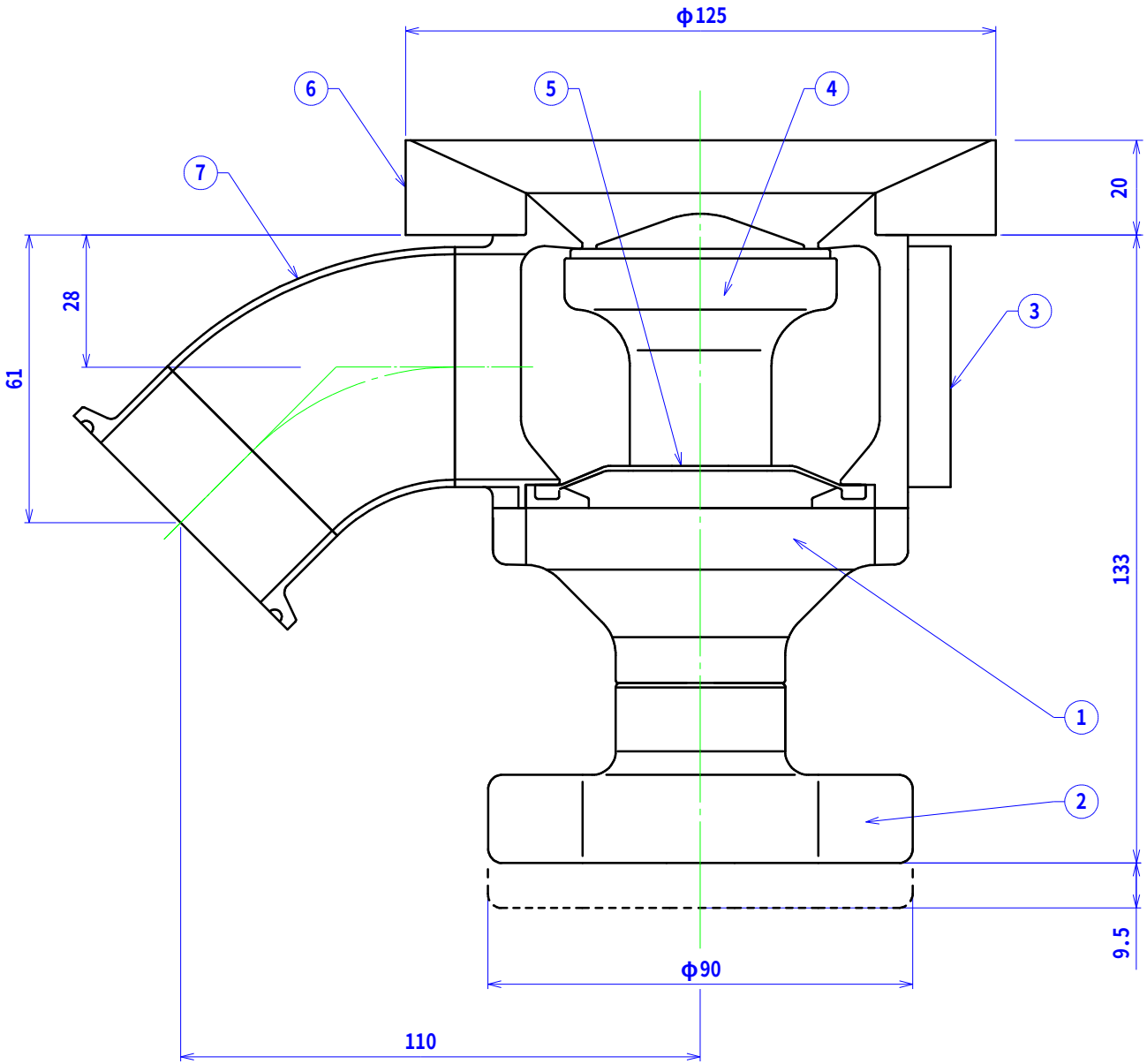

No	Part's Name	Material	Qt'y	Rev.Reason
1	M-Body	SUS304	1	
2	M-Handl	SUS304	1	
3	2.0S Body	SUS316L	1	Electro-Polishing
4	D-Main Shaft Ass'y	SUS316L+PTFE	1	Electro-Polishing
5	Diaphragm	PTFE/FKM	1	
6	φ125 × 20t Flange	SUS316L	1	Electro-Polishing
7	2.0S 45 ° Sweep Elbow	SUS316L	1	Electro-Polishing

指示無き R面

R =

指示無き C面

C =

普通寸法許容公差 +-

区分	精級	中級	粗級
~6	0.05	0.08	0.2
~18	0.08	0.10	0.3
~50	0.10	0.15	0.4
~180	0.20	0.30	0.8
~500	0.30	0.50	1.2
~1000	0.60	1.00	2.5

REV.	DATE	REV.REASON	CHECK
△×			

I.O.Technologies

MATERIAL

DATE 2000/6/21

APPROVED

CHECKED

DESIGNED S.OHTSUKA

MODEL SD-B-50 M-1-2-0-0

TITLE Diaphragm Valve (Tank)

DRAWING No. T00285 △ Free