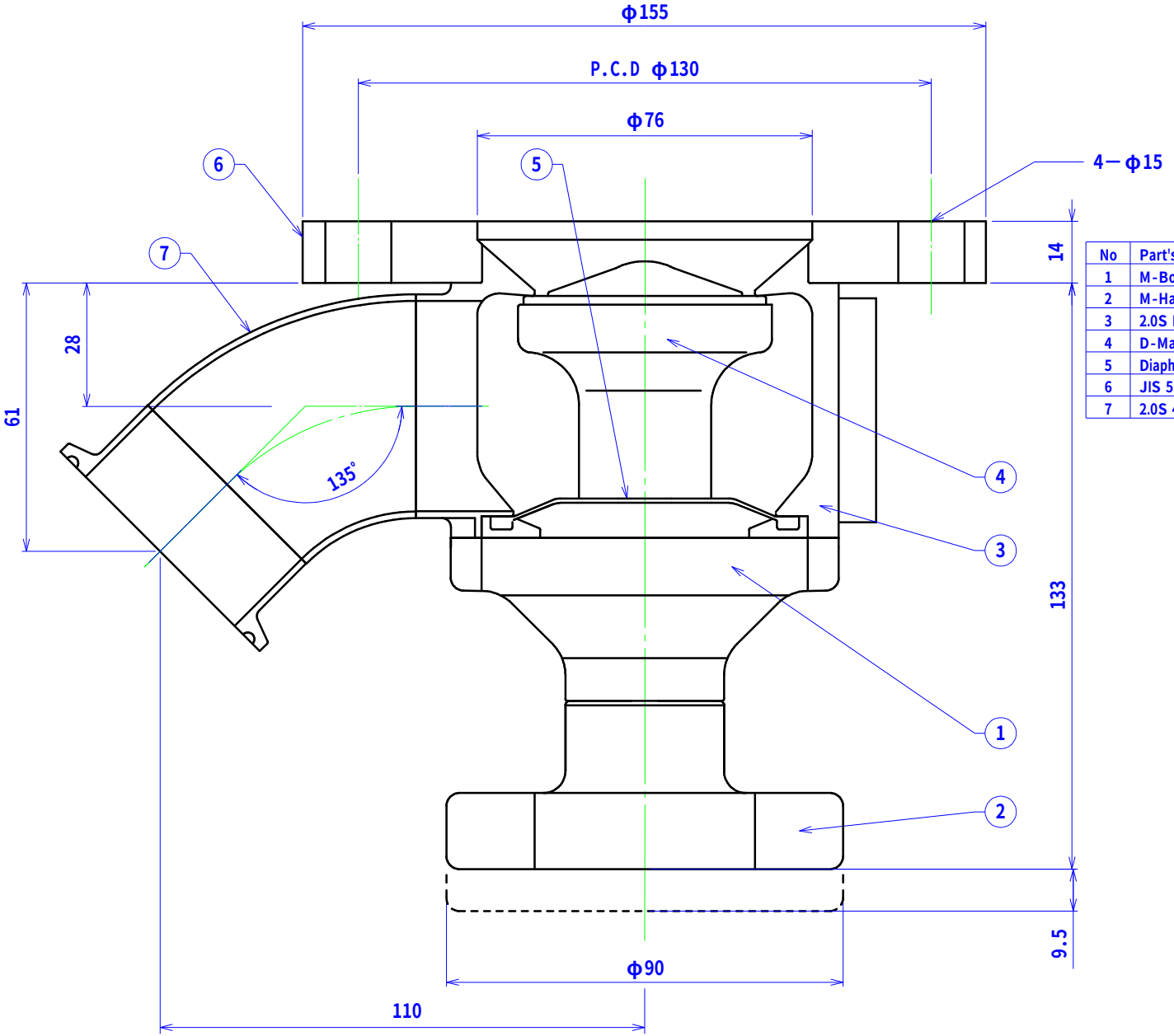

No	Part's Name	Material	Qt'y	Rev.Reason
1	M-Body	SCS13	1	
2	M-Handl	SCS13	1	
3	2.0S Body	SUS316L	1	Electro-Polishing
4	D-Main Shaft Ass'y	SUS316L+PTFE	1	Electro-Polishing
5	Diaphragm	PTFE/FKM	1	
6	JIS 5K 65A Flange	SUS316L	1	Electro-Polishing
7	2.0S 45 ° Sweep Elbow	SUS316L	1	Electro-Polishing

指示無き R面	普通寸法許容公差 + -	区分	精級	中級	粗級
R =		～6	0.05	0.08	0.2
指示無き C面		～18	0.08	0.10	0.3
		～50	0.10	0.15	0.4
		～180	0.20	0.30	0.8
		～500	0.30	0.50	1.2
		～1000	0.60	1.00	2.5
C =		◎		▱	
		//		⊥	

REV.	DATE	REV.REASON	CHECK
△×			

I.O.Technologies

MODEL	SD-B-50 M-1-2-0-1		
MATERIAL		DATE 2000/10/20	TITLE Diaphragm Valve (Tank)
APPROVED	CHECKED	DESIGNED S.OHTSUKA	DRAWING No. T00175 △ Free