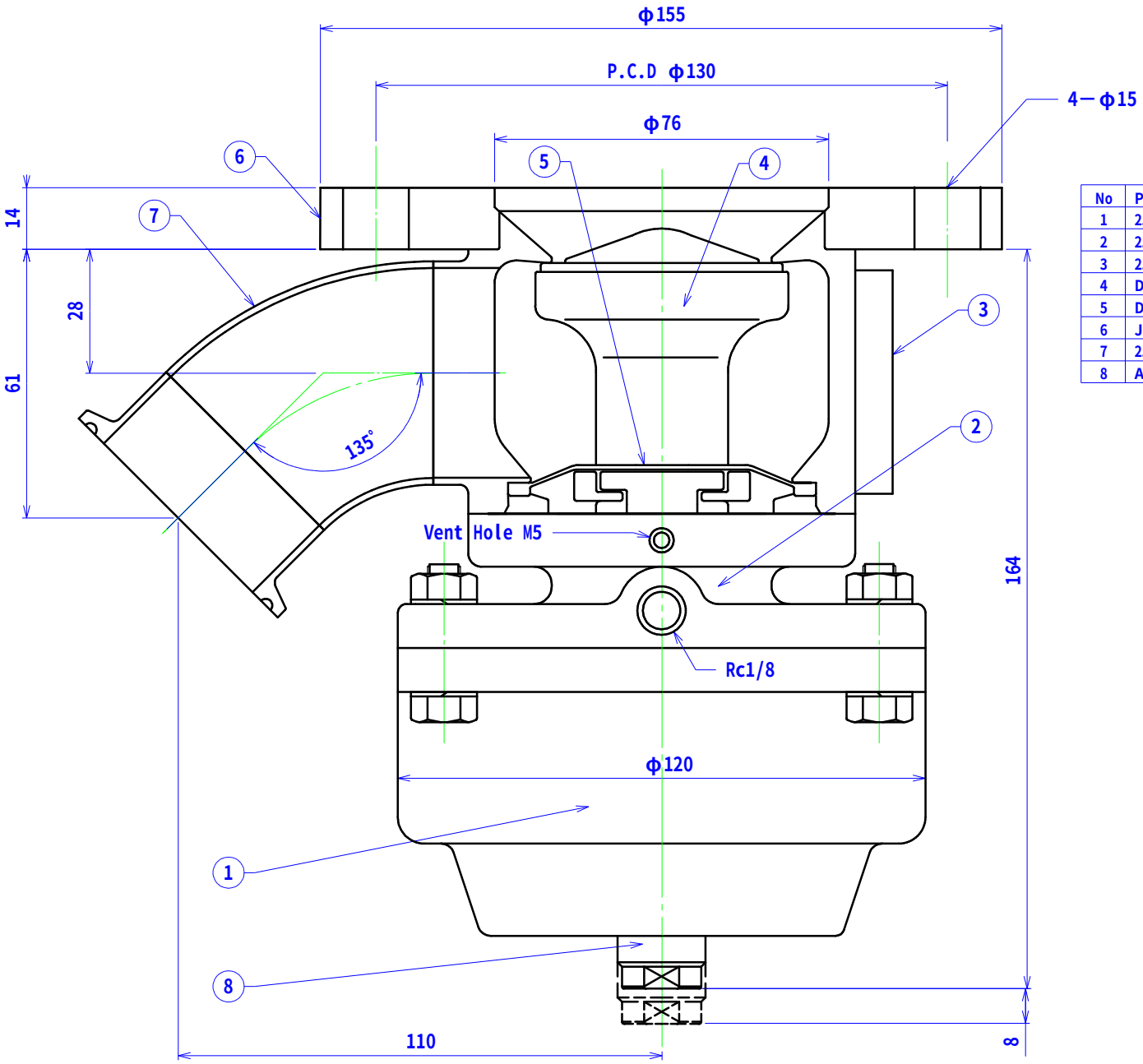

No	Part's Name	Material	Qt'y	Rev.Reason
1	2.0S A-Hausing	SCS13	1	
2	2.0S A-Body	SCS13	1	
3	2.0S Body	SUS316L	1	Electro-Polishing
4	D-Main Shaft Ass'y	SUS316L+PTFE	1	Electro-Polishing
5	Diaphragm	PTFE/FKM	1	
6	JIS5K 65A Flange	SUS316L	1	Electro-Polishing
7	2.0S 45 ° Sweep Elbow	SUS316L	1	Electro-Polishing
8	A-Indicator	SUS304	1	

指示無き R面

R＝

指示無き C面

C＝

普通寸法許容公差 ＋ －

区分	精級	中級	粗級
～6	0.05	0.08	0.2
～18	0.08	0.10	0.3
～50	0.10	0.15	0.4
～180	0.20	0.30	0.8
～500	0.30	0.50	1.2
～1000	0.60	1.00	2.5
◎		⏥	
//		⊥	

REV.	DATE	REV.REASON	CHECK
△×			

I.O.Technologies

MATERIAL

DATE 2000/10/30

APPROVED

CHECKED

DESIGNED S.OHTSUKA

MODEL SD-B-50 A-1-2-0-1

TITLE Diaphragm Valve (Tank)

DRAWING No. T00168 △ Free