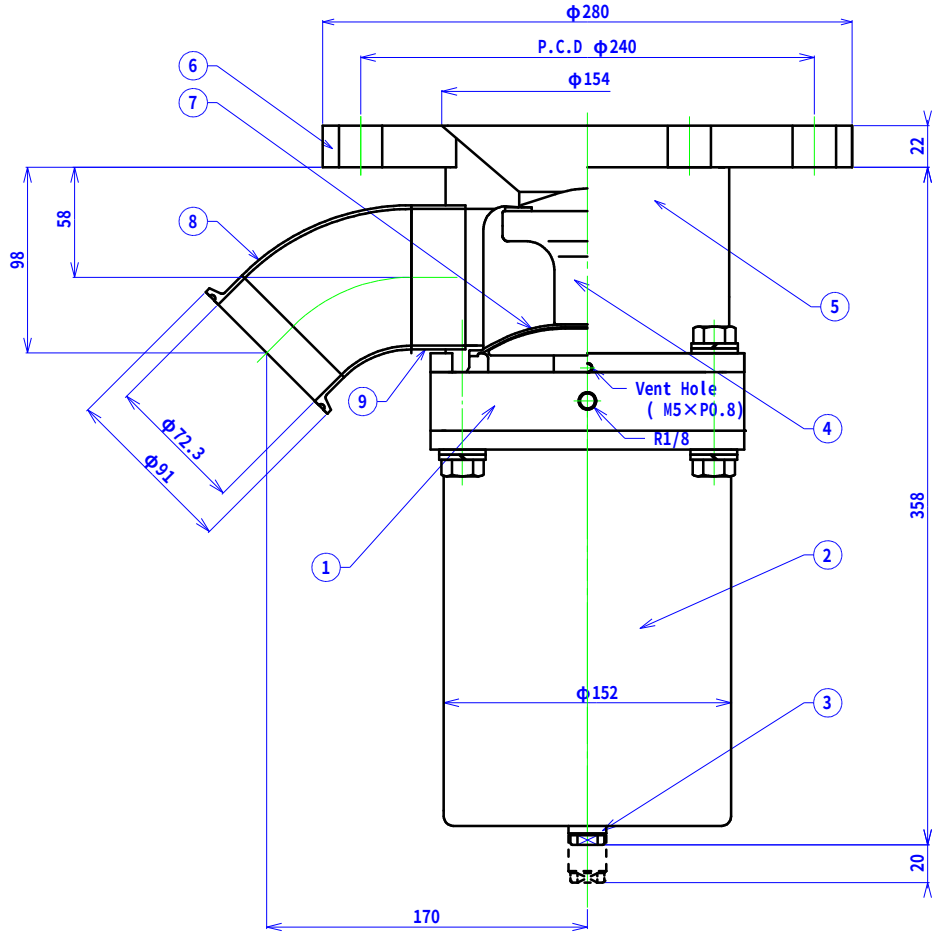

No	Part's Name	Material	Qt'y	Rev.Reason
1	A-Hausing	SUS304	1	
2	A-Bonnet	SUS304	1	
3	A-Indicator	SUS304	1	
4	D-Main Shaft Ass'y	SUS316L+PTFE	1	Electro-Polishing
5	3.0S Body	SUS316L	1	Electro-Polishing
6	10K 150A Body Flange	SUS316L	1	Electro-Polishing
7	Diaphragm	PTFE/FKM	1	
8	3.0S 45 ° Sweep Elbow	SUS316L	1	Electro-Polishing
9	3.0S Main Tube	SUS316L	1	Electro-Polishing
10	Switch	SUS303	1	

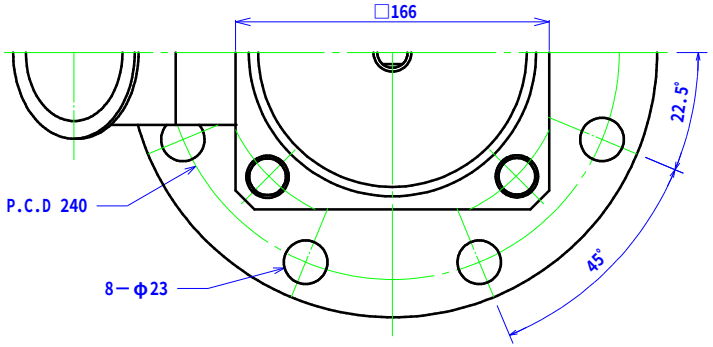

接液部材質

Diaphragm	PTFE
Body	SUS316L

指示無き R面	普通寸法許容公差 + -	区分	精級	中級	粗級
R＝		～6	0.05	0.08	0.2
指示無き C面		～18	0.08	0.10	0.3
		～50	0.10	0.15	0.4
		～180	0.20	0.30	0.8
		～500	0.30	0.50	1.2
		～1000	0.60	1.00	2.5
C＝		◎		▱	
		//		⊥	

REV.	DATE	REV.REASON	CHECK
△×			

I.O.Technologies

MODEL	SD-B-80 A-1-2-0-6		
MATERIAL		DATE 2000/7/21	TITLE Diaphragm Valve (Tank)
APPROVED	CHECKED	DESIGNED S.OHTSUKA	DRAWING No. T00144 △ Free